Component Location Index

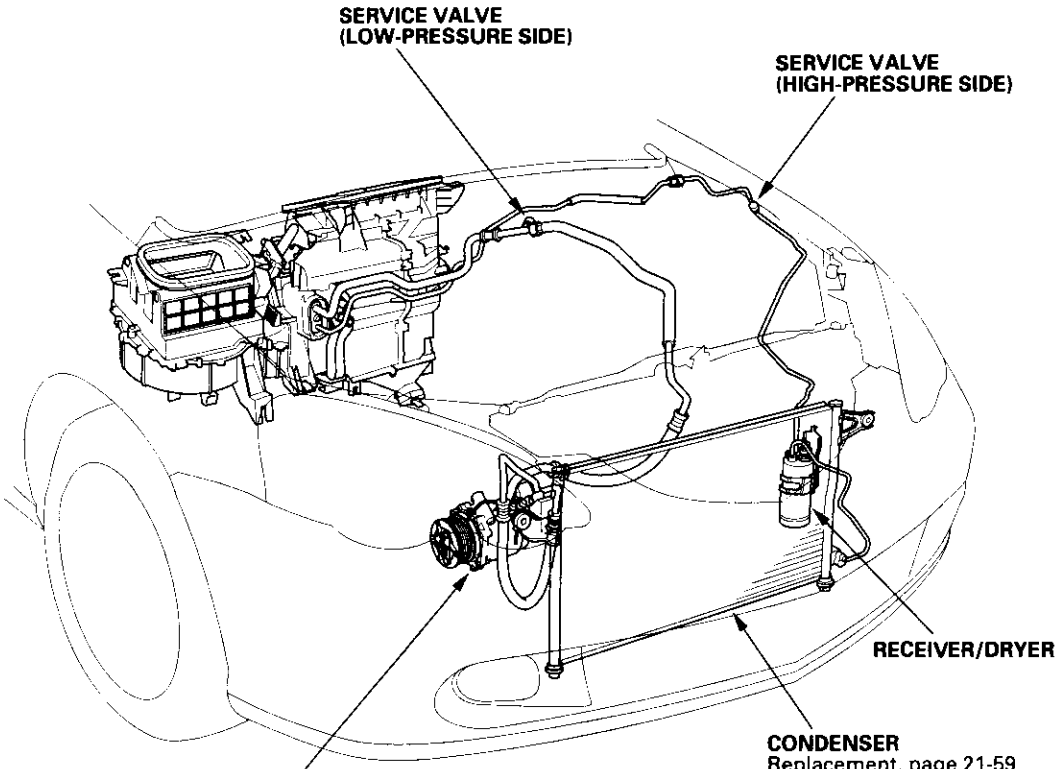

COMPRESSOR
Replacement, page 21-54
Clutch Check, page 21-55
Clutch Overhaul, page 21-56
Thermal Protector Check, page 21-55
Thermal Protector Replacement, page 21-58
Relief Valve Replacement, page 21-58

(cont'd)

Component Location Index (cont'd)

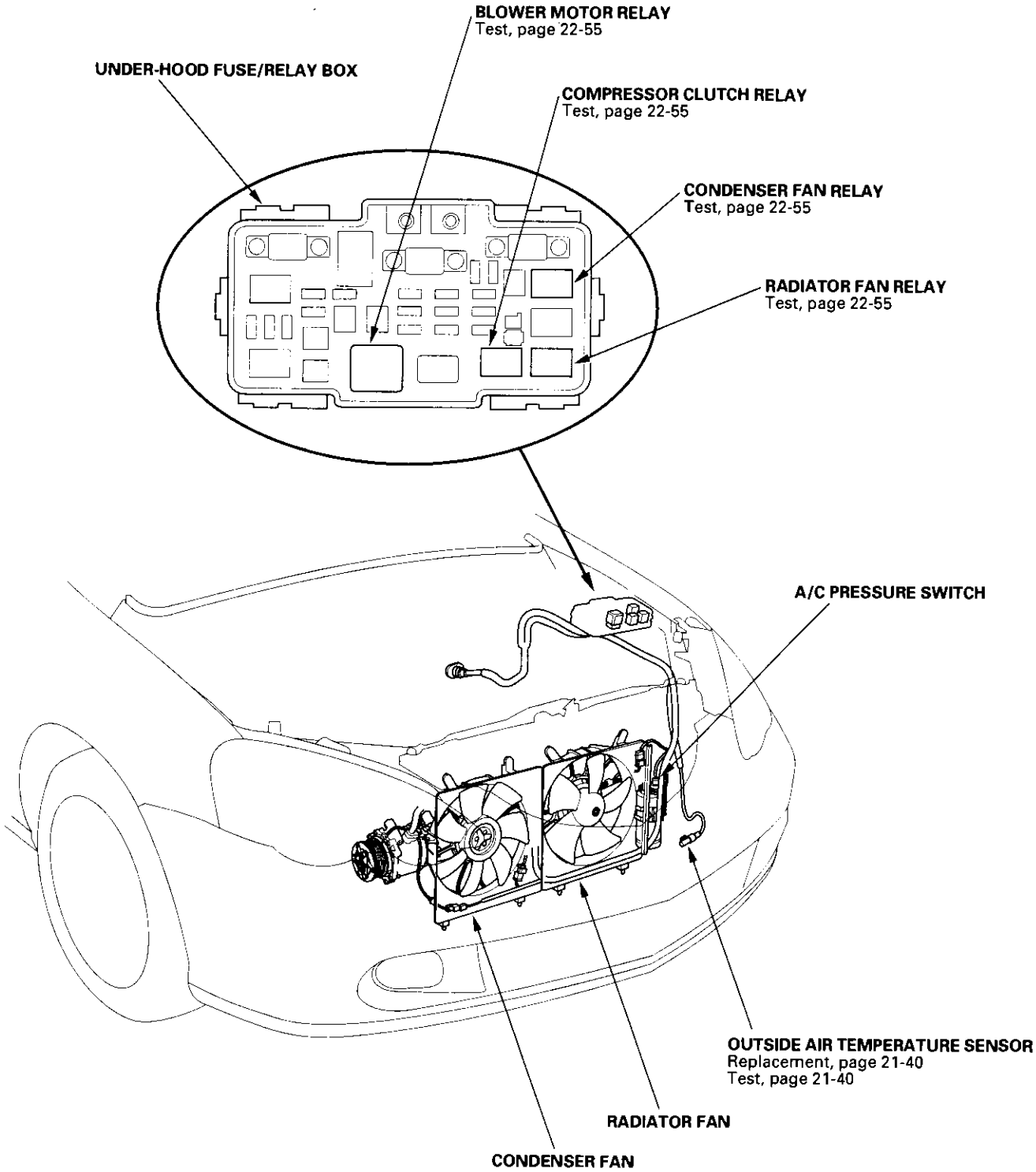

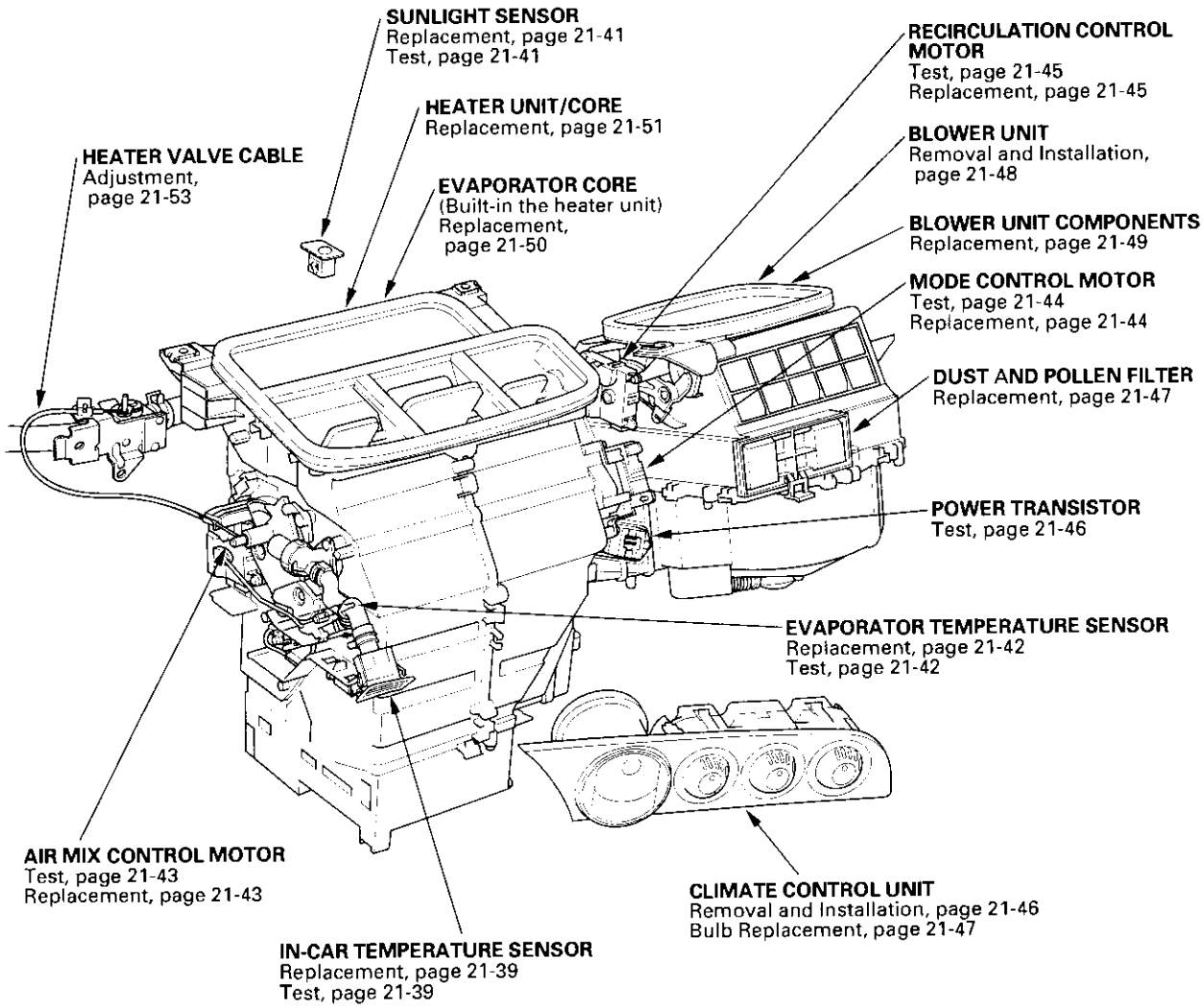
SUNLIGHT SENSOR
Replacement, page 21-41
Test, page 21-41
HEATER UNIT/CORE
Replacement, page 21-51
HEATER VALVE CABLE
Adjustment,
page 21-53
EVAPORATOR CORE
(Built-in the heater unit)
Replacement,
page 21-50
RECIRCULATION CONTROL MOTOR
Test, page 21-45
Replacement, page 21-45
BLOWER UNIT
Removal and Installation,
page 21-48
BLOWER UNIT COMPONENTS
Replacement, page 21-49
MODE CONTROL MOTOR
Test, page 21-44
Replacement, page 21-44
DUST AND POLLEN FILTER
Replacement, page 21-47
POWER TRANSISTOR
Test, page 21-46
EVAPORATOR TEMPERATURE SENSOR
Replacement, page 21-42
Test, page 21-42
AIR MIX CONTROL MOTOR
Test, page 21-43
Replacement, page 21-43
CLIMATE CONTROL UNIT
Removal and Installation, page 21-46
Bulb Replacement, page 21-47
IN-CAR TEMPERATURE SENSOR
Replacement, page 21-39
Test, page 21-39